MULTILIFT

ELEVATION VIEW TYPE-3

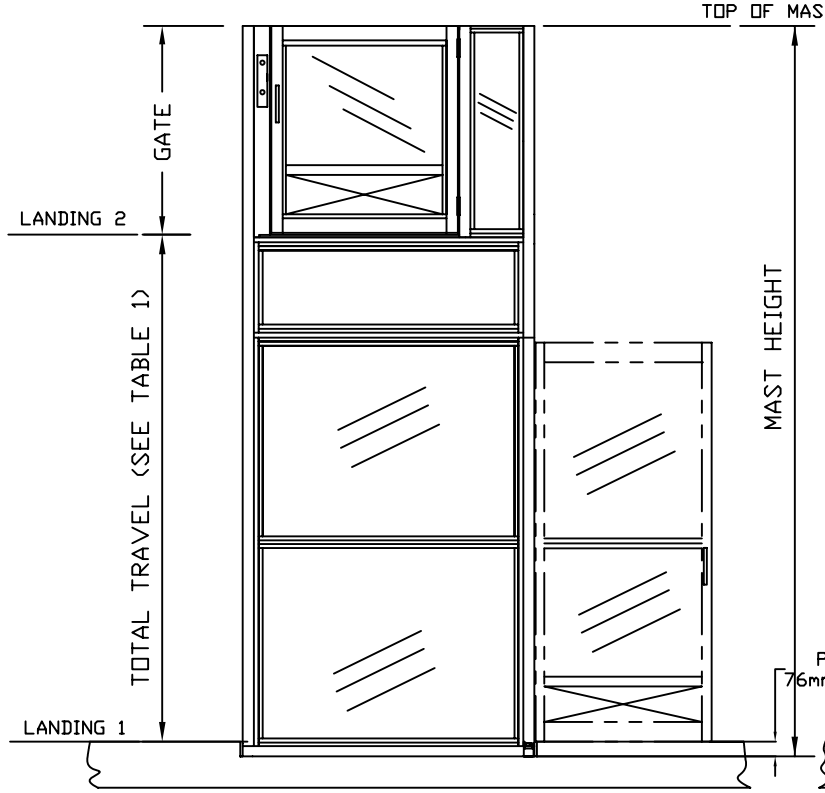

TYPICAL ENCLOSURE

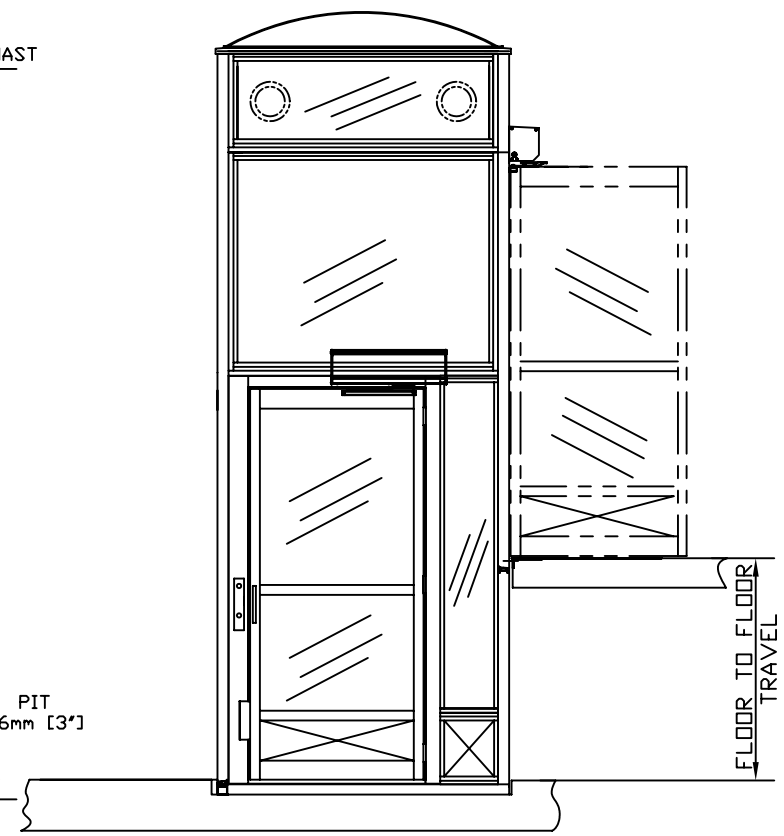

TYPICAL ENCLOSURE WITH EXTENSION & CLEAR PLEXIGLASS DOME & VENTILATION SYSTEM & DOOR OPERATOR

TOP VIEW TYPE-3

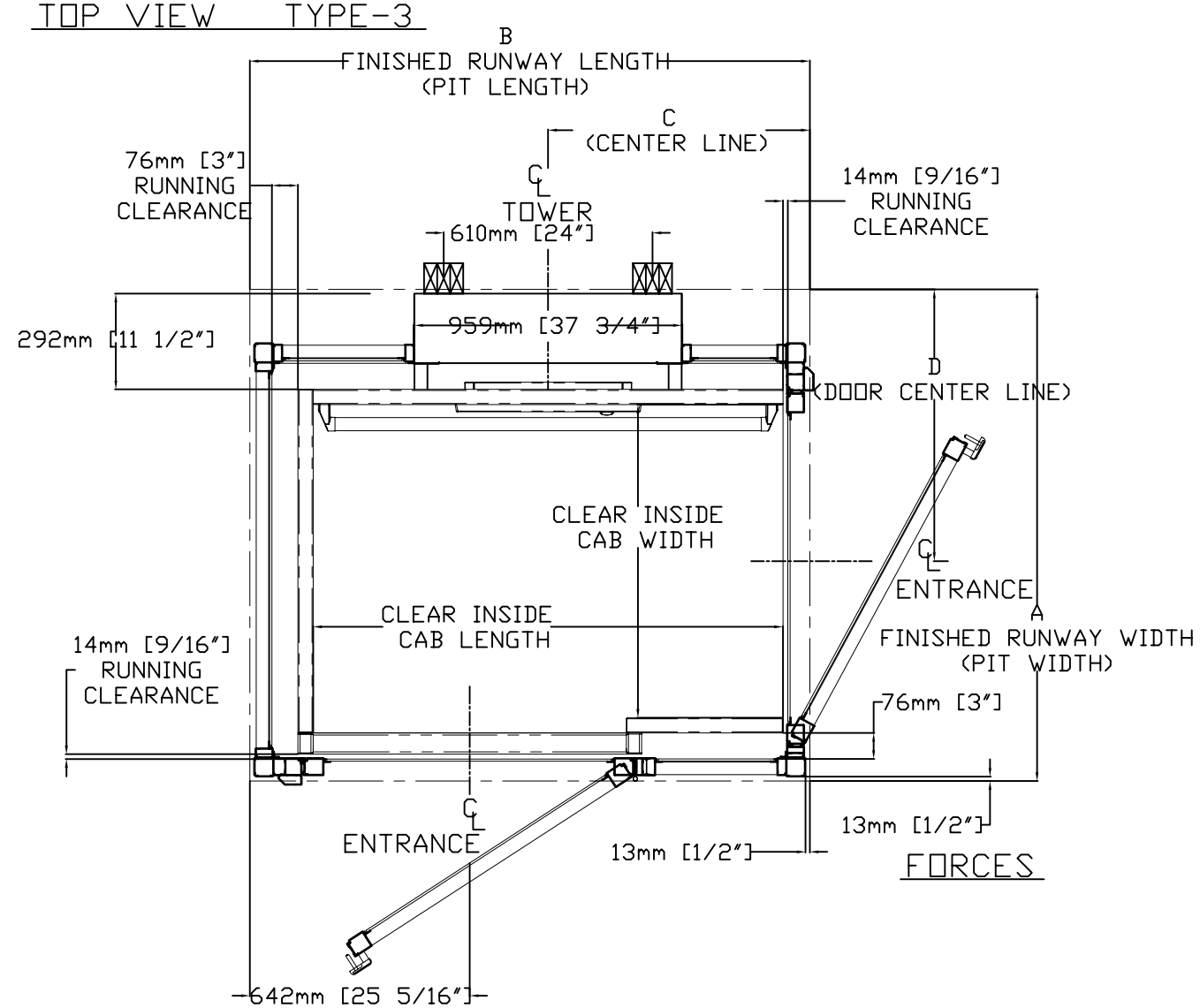

FORCES

TABLE 1- MAST HEIGHT

TRAVEL	TOWER HEIGHT		MIN ENCLOSURE HEIGHT	
mm (Inches)	mm	Inches	mm	Inches
1219 (48")	2032	80	2286	90
1829 (72")	2642	104	2896	114

TABLE 2 - ENCLOSURE DIMENSION

CLEAR INSIDE CAB WIDTH		CLEAR INSIDE CAB LENGTH		A FINISHED RUNWAY WIDTH		B FINISHED RUNWAY LENGTH		C TOWER CENTER LINE		D DOOR CENTER LINE (IN CASE OF 36" DOOR)	
mm	Inches	mm	Inches	mm	Inches	mm	Inches	mm	Inches	mm	Inches
914	36	1219	48	1449	57 1/16	1483	58 3/8	687	27 1/16	806	31 3/4
914	36	1372	54	1449	57 1/16	1635	64 3/8	764	30 1/16	806	31 3/4
914	36	1524	60	1449	57 1/16	1788	70 3/8	840	33 1/16	806	31 3/4

ANCHOR POINTS

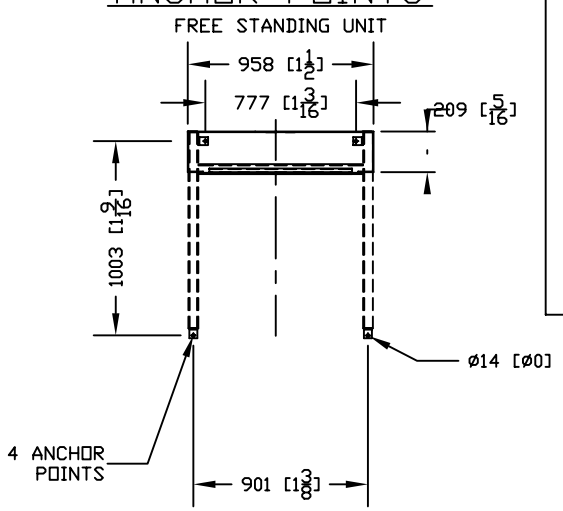

FORCES

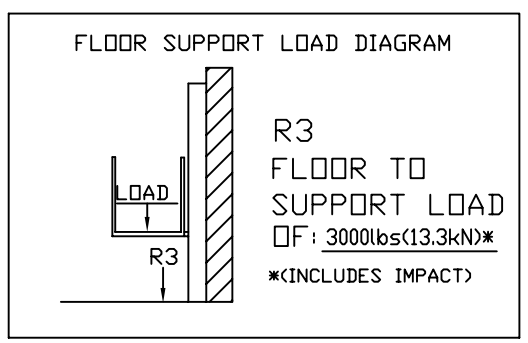

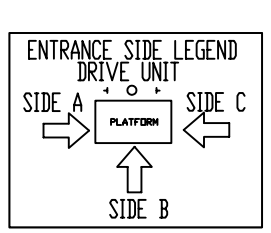

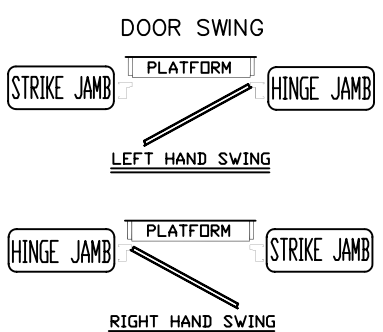

THE INFORMATION DISCLOSED HEREIN IS THE EXCLUSIVE PROPERTY OF
savaria™
AND MAY NOT BE USED BY OTHERS WITHOUT PRIOR WRITTEN CONSENT

TITLE: MULTILIFT TYPE - 3

CUSTOMER

PROJECT:

LOCATION:

DATE: 11/22/2011

SCALE: 1:1

DRAFTER: PHILLIP TRAN

REVISION: 000 11/22/2011

SHEET 1 OF 1

DRAWING NO: MULTILIFT PLUS ENCLOSURE