REVISIONS			
REV	ECO NO.	DATE	REVISED BY
000	03-0084	OCT-15-03	1ST RELEASE

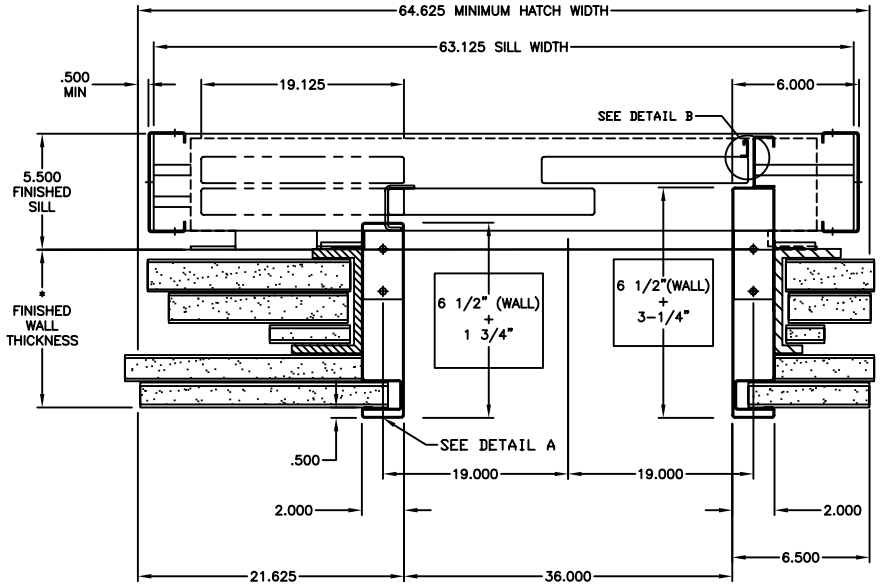

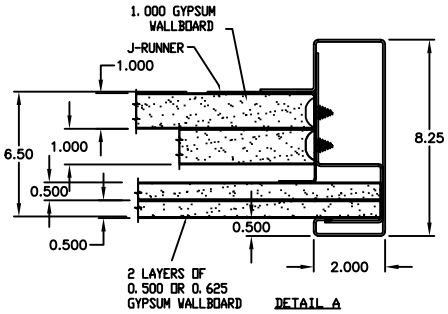

DETAIL A

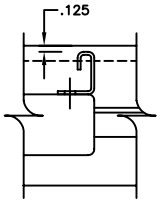

DETAIL B

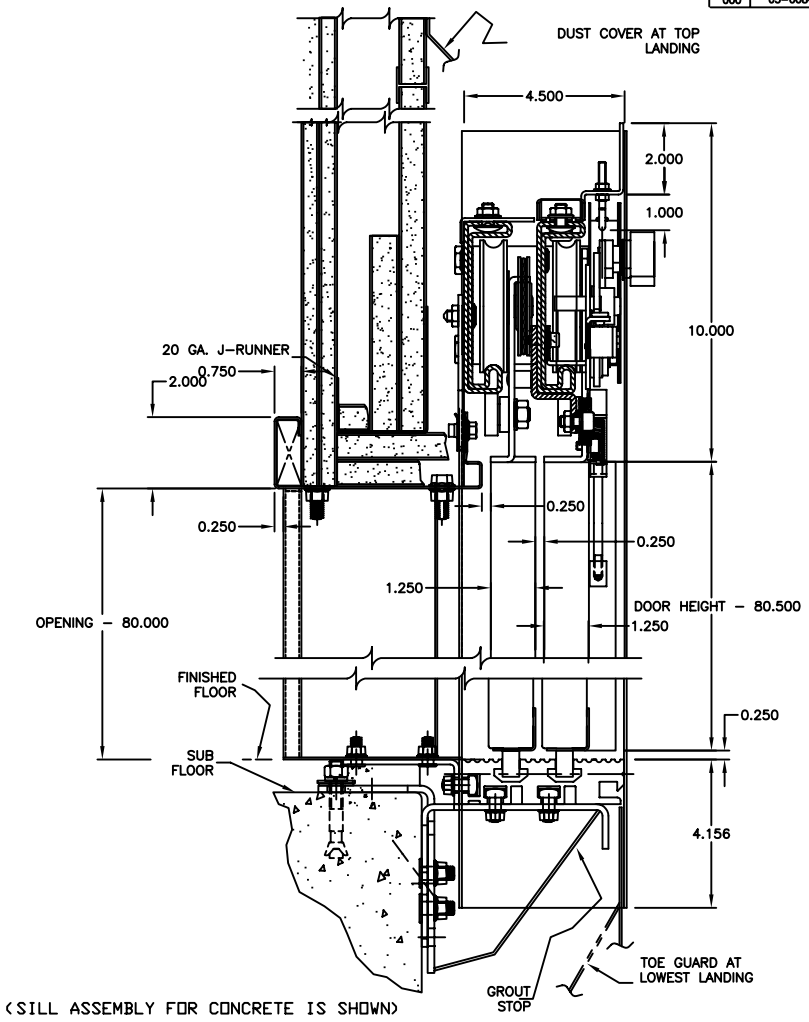

(SILL ASSEMBLY FOR CONCRETE IS SHOWN)

TYPICAL SECTION

RIGHT HAND SHOWN

CONTRACTOR PLEASE NOTE:

1'X12' GYPSUM BOARD LINER WITH FILLER SHIMS REQUIRED FOR ENTRANCES OVER 7'0'. ENTRANCES 7'0' OR LESS IN HEIGHT, DO NOT REQUIRE THE USE OF LINERS AND FILLER SHIMS AROUND EXTERIOR OF THE FRAME.

THE INFORMATION DISCLOSED HEREIN IS THE EXCLUSIVE PROPERTY OF CONCORD® AND MAY NOT BE USED BY OTHERS WITHOUT PRIOR WRITTEN CONSENT

UNLESS OTHERWISE SPECIFIED ALL DIMENSIONS ARE IN INCHES ALL DIMENSIONS IN [ ] ARE METRIC
TOLERANCES ON:
.X=±0.1 [.X=±3]
.XX=±0.03 [.XX=±0.8]
.XXX=±0.01 [.XXX=±0.25]
ANGLES X =±2.X =±0.5

DO NOT SCALE DRAWING

REMOVE ALL BURRS & SHARP CORNERS

DESIGNED BY: WITTUR INC.	DESIGN DATE:	SCALE: N/A	REVISION: 000
DRAWN BY:	DRAWN DATE: OCT-08-03	DRAFTSPERSON:	
SHEET 1 OF 1	DRAWING NO: ENT-WITTUR-DW		SIZE B

TITLE: ENTRANCE 2 SPEED MNTG DETAILS -DRYWALL (WITTUR) 36.00 x 80.00

MATERIAL: N/A

FINISH: N/A