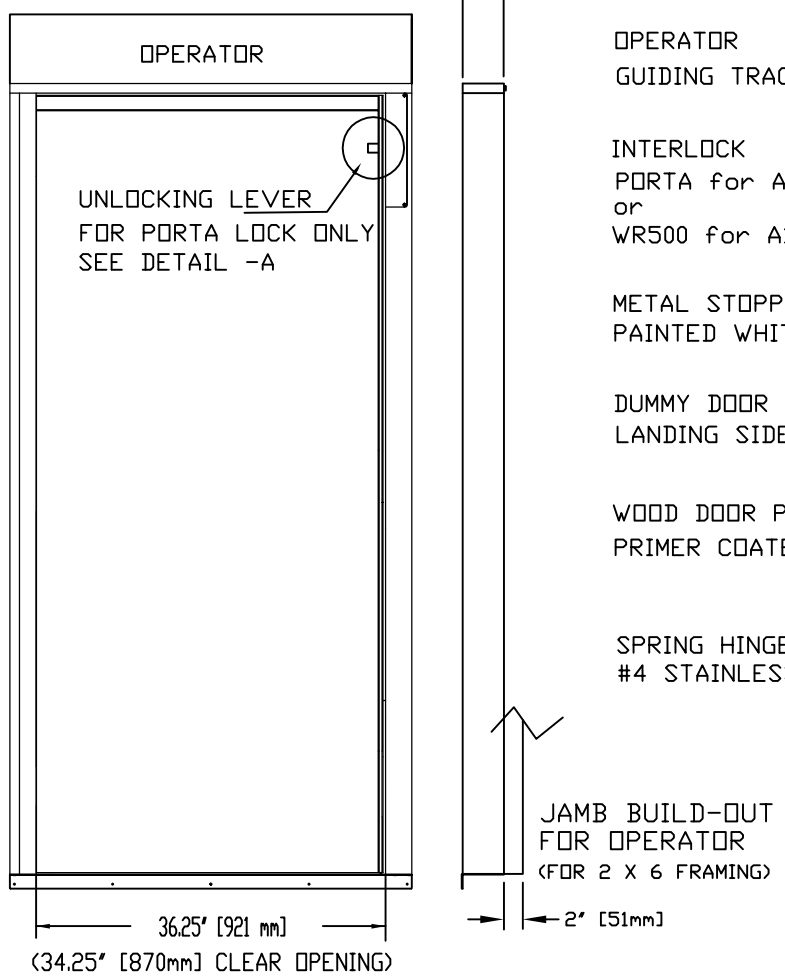

HOISTWAY VIEW

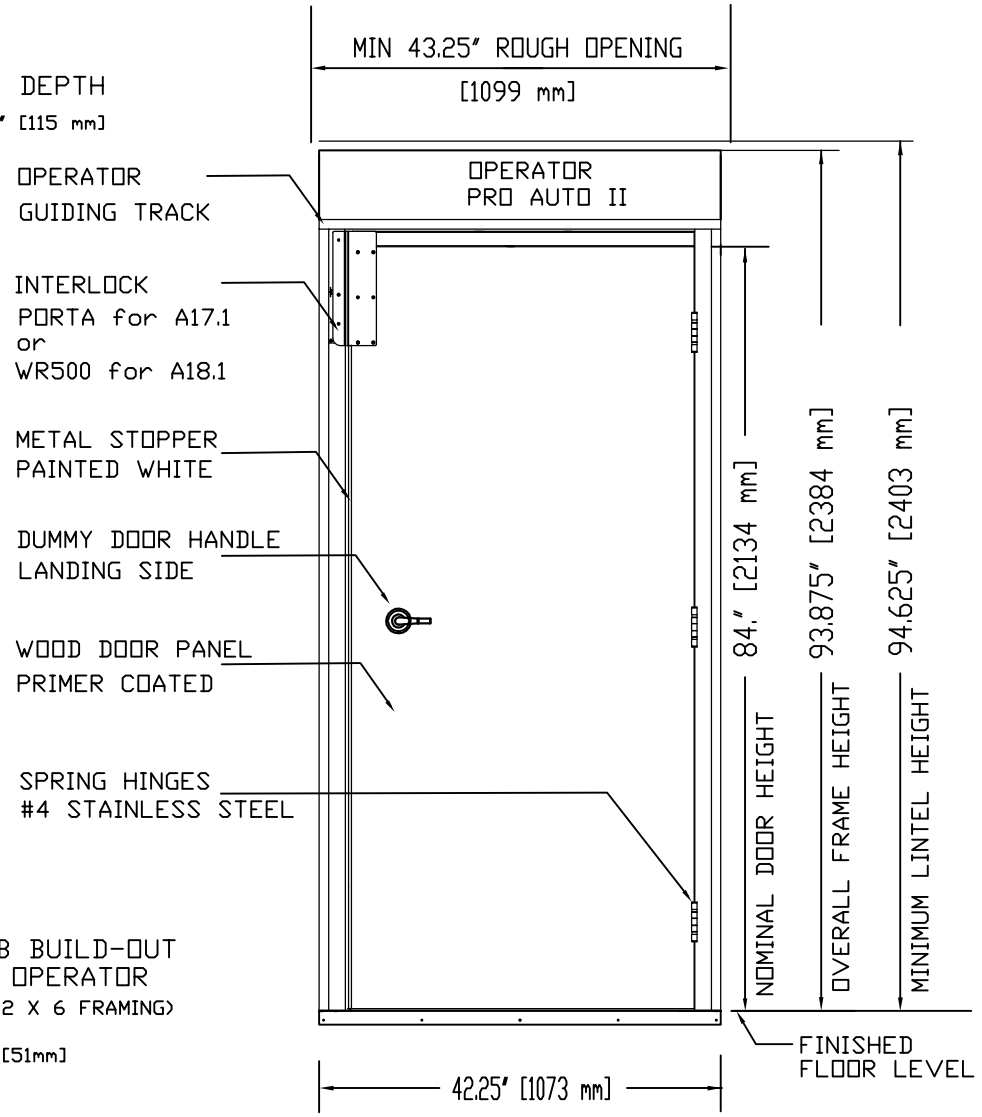

LANDING VIEW

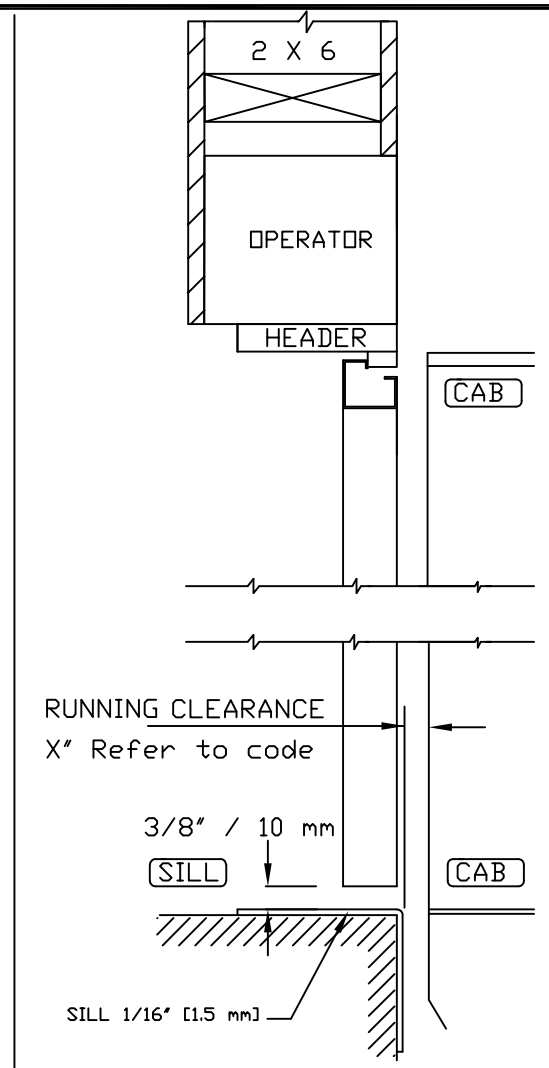

VERTICAL SECTION

PROVISION BY OTHERS ALL DOORS

- DRYWALL OR PARGING AROUND DOOR
- FRAMES AROUND DOOR SHALL BE WOOD CONSTRUCTION WITH ALL EDGES AND JOINTS SANDED TO A SMOOTH,
- FINAL PAINT
- FINISH MOLDING AROUND DOOR FRAME
- SEE DATASHEET OF THE INSTALLATION DRAWING FOR LANDING ENTRANCE SCHEDULE.

ADD. PROVISION FOR DOOR SLAB BY OTHERS

- DOOR SHALL BE SOLID-CORE, SWINGING TYPE
- 1.75 THICK, 36" x 84" DOOR SLAB
- DUMMY DOOR HANDLE
- SEE BELOW FOR CUT OUT LIST FOR DOOR BY OTHERS

NOTE: ALL INFORMATIONS IS SUBJECT TO CHANGE.

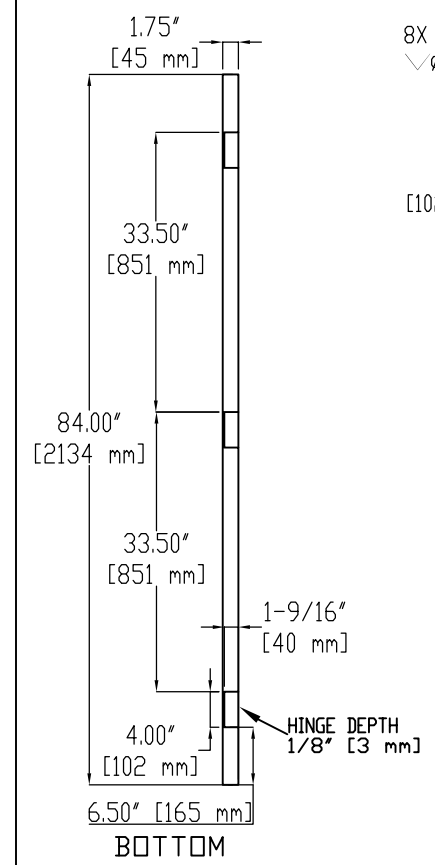

BOTTOM

DOOR SLAB HINGE PATTERN

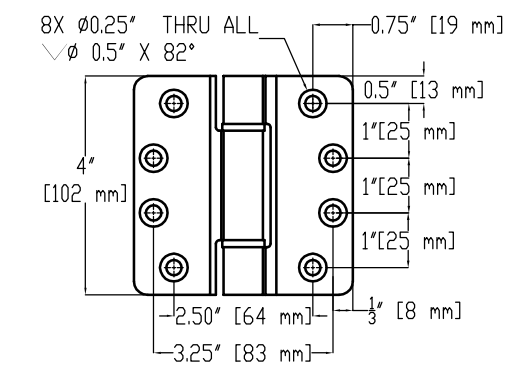

HINGE DETAIL

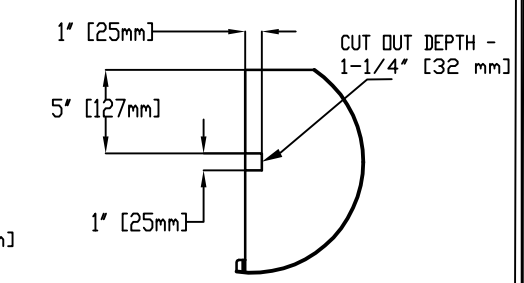

DETAIL - A

CUT OUT LIST IN PROVISION BY OTHERS :-
1- HINGE CUT OUT
2- EMERGENCY LEVER CUT OUT FOR PORTA-LOCK

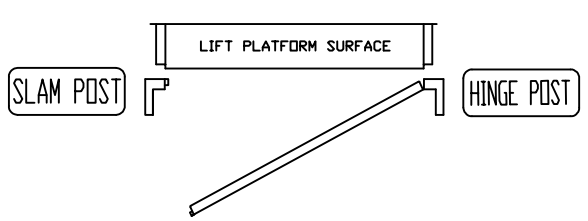

LEFT HAND SWING

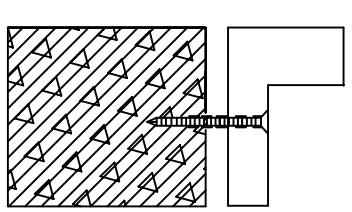

DOOR ATTACHEMENT HARDWARE

(5X) #8 X 3 FH SCREWS

DOOR PANEL TYPE

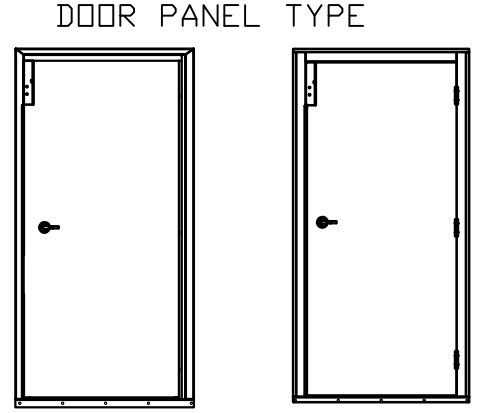

FLAT DOOR BY OTHERS

HORIZONTAL SECTION DETAIL

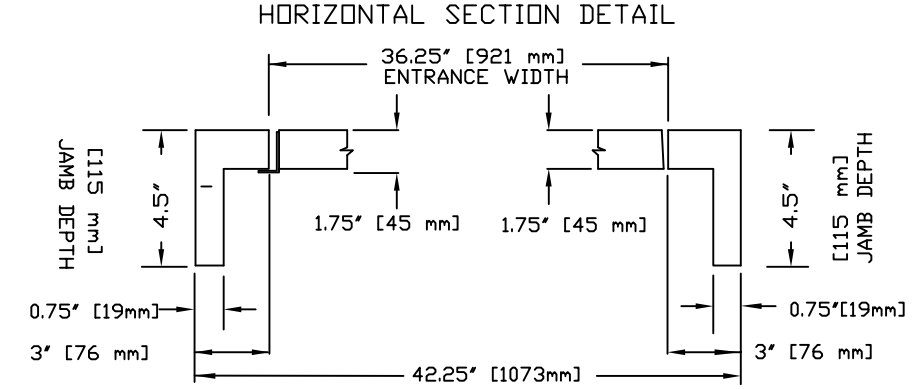

36x84" AUTO WOODEN LH DOOR

CUSTOMER:	DATE: MM/DD/YY
PROJECT:	REVISION DATE: MM/DD/YY
ADDRESS:	COMPLETED BY: PS
	Part No.
	Variant No.
	savaria™
	JOB No. JOB NUMBER
	SHEET No. 1 OF 1