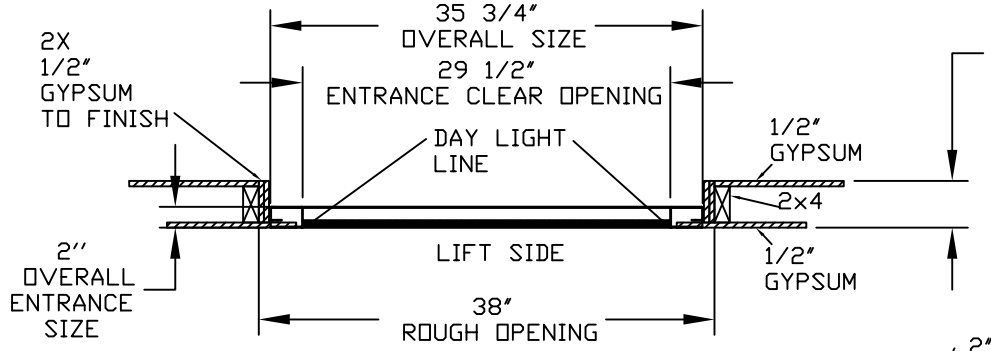

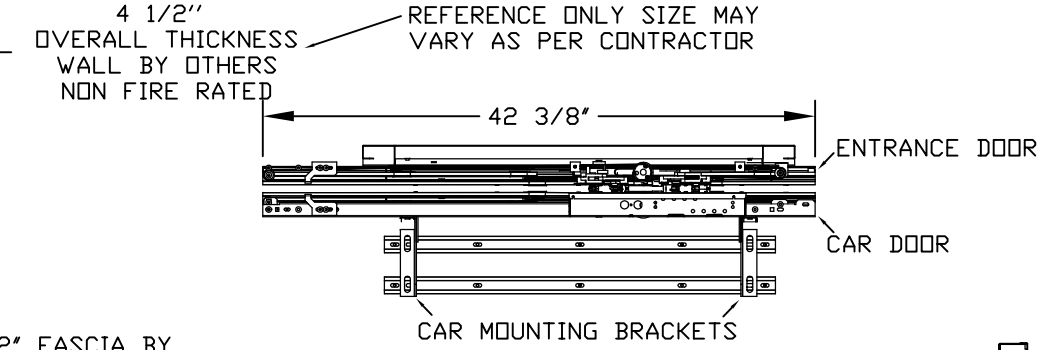

NOTE: ENTRANCE FRAME ASSEMBLY IS NOT DESIGN TO BEAR OVERHEAD LOADS. CONTRACTOR TO PROVIDE ADEQUATE WALL STRUCTURE SUPPORT.

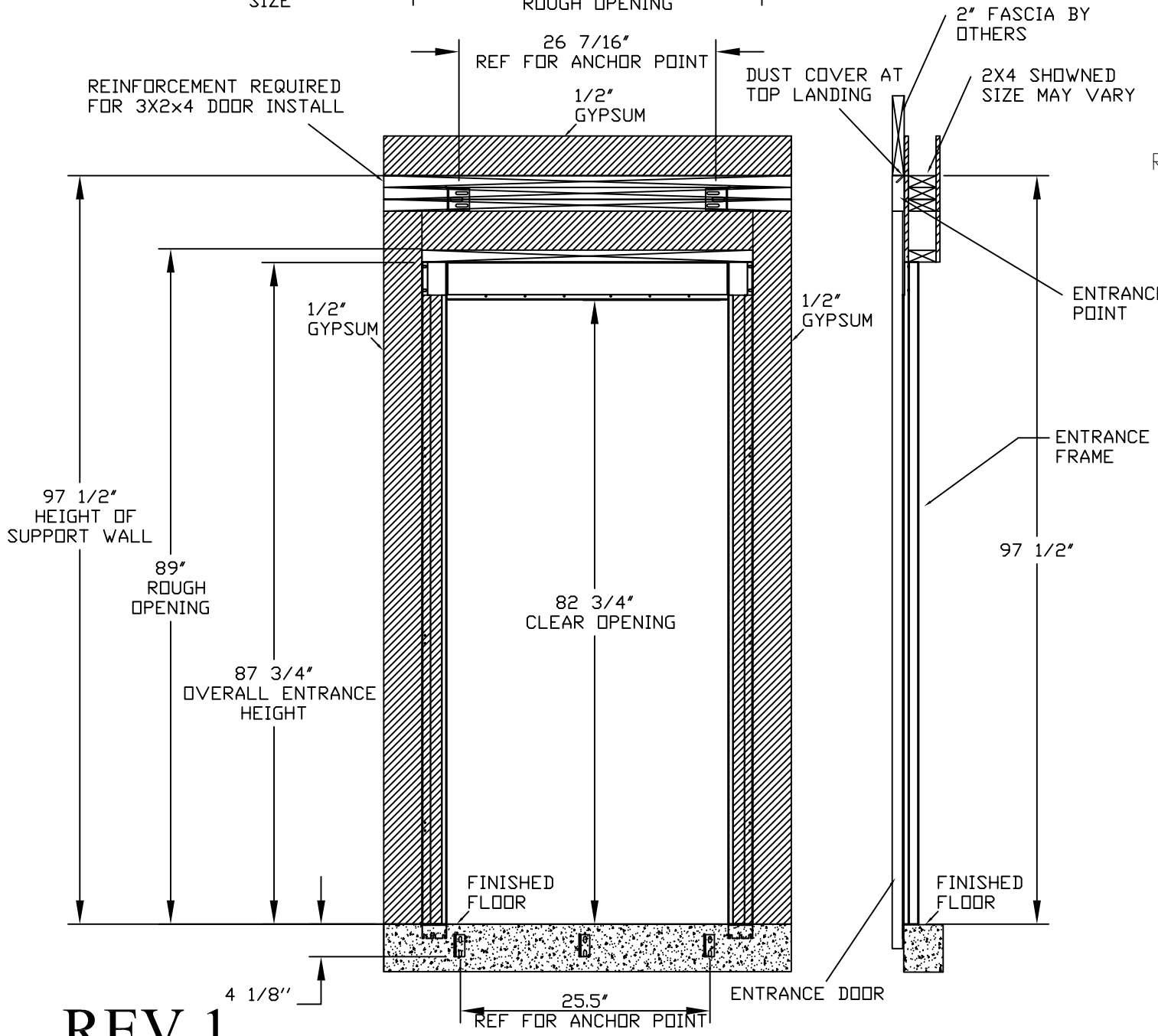

RVD
RH
RVU

ENTRANCE LOADS ON BUILDING
RH = 2500 N (562 lbf)
RVD = 775 N (175 lbf)
RVU = 500 N (112 lbf)

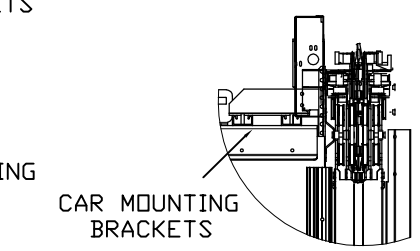

DETAIL B

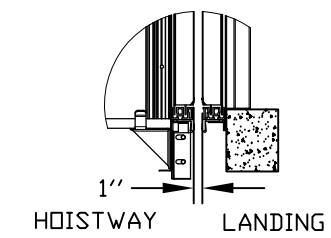

DETAIL C

OVERHEAD REQUIRED = 100"

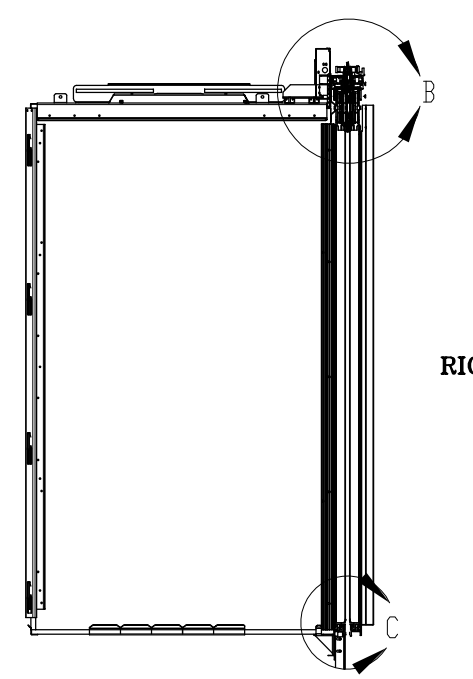

RIGHT HAND SHOWN

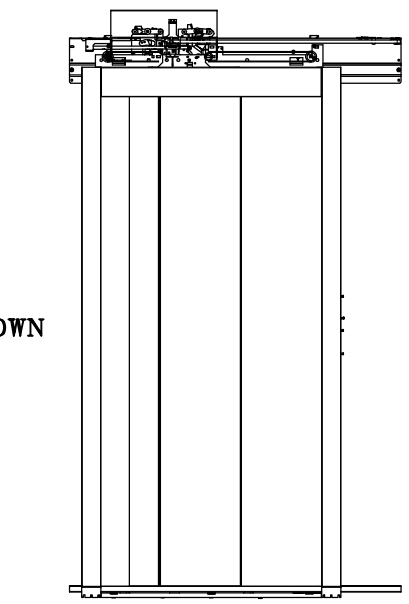

REV 1

H84"

29 $\frac{1}{2}$" SLIM DOOR

SLIM DOORS
2100

CUSTOMER:	DATE: 06/16/20	Part No.
PROJECT:	REVISION DATE:	Variant No.
ADDRESS:	COMPLETED BY:	savaria
	0	JOB No. / SHEET No. 1 OF 1