SECTIONAL VIEW – INFINITY HD Model 4860 2SPD

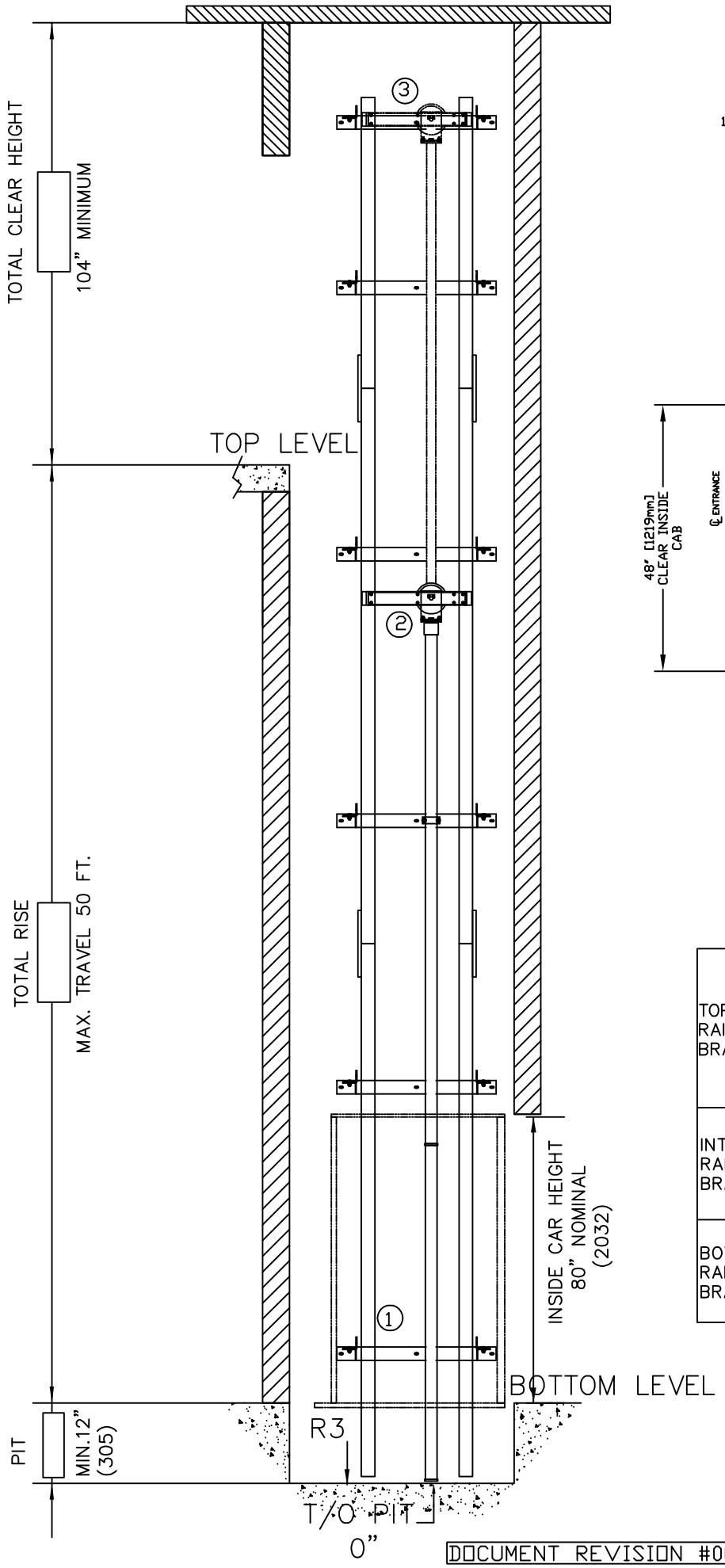

PLAN VIEW – INFINITY HD Model 4860 TYPE 2SPD

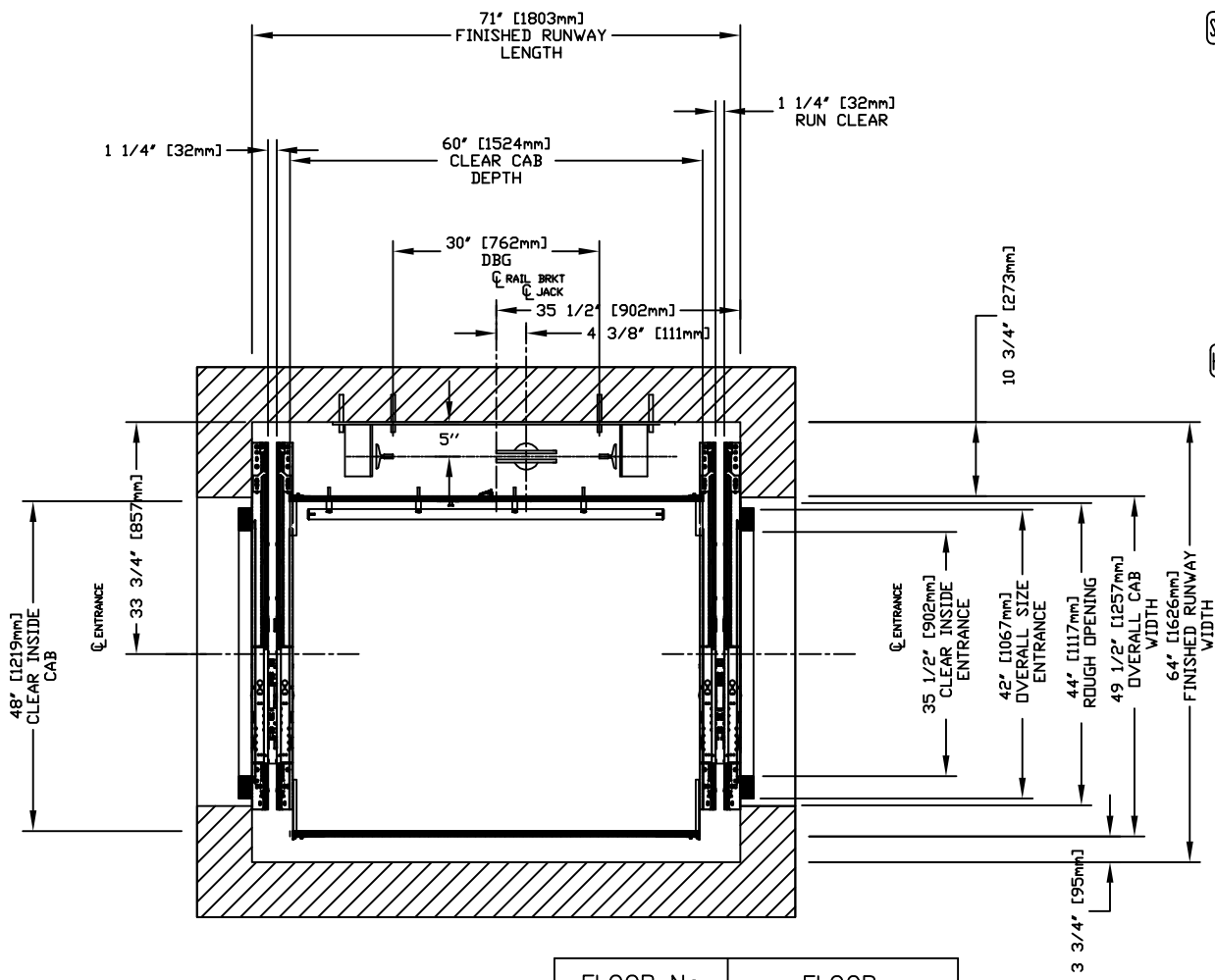

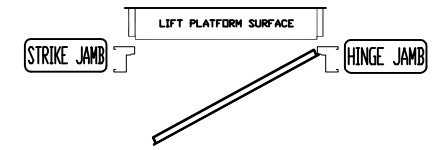

LEFT HAND SWING

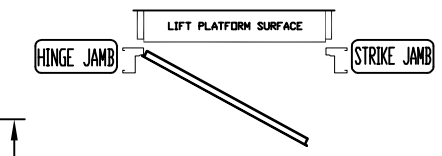

RIGHT HAND SWING

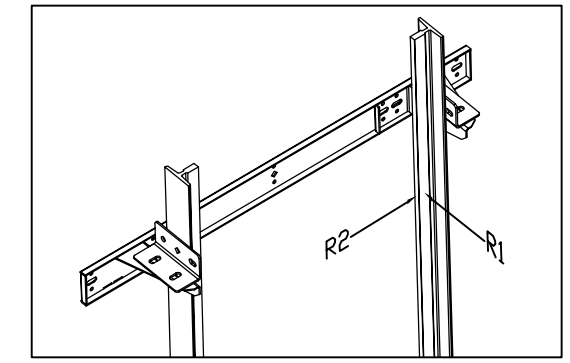

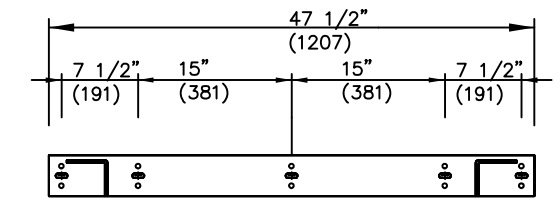

RAIL BRACKET

RAIL FORCES	
✳R1	✳R2
422lbf.	251lbf.
RAIL WEIGHT : 8.0 lbs / ft	

R3 NOTE:
PIT FLOOR TO SUPPORT LOAD OF: 8.22Kips ✳(INCLUDES IMPACT)

FOR TOTAL PULL-OUT FORCE ON RAIL BRACKET, R1 MUST BE DOUBLED eg. 844LBF.

FOR LOCAL APPLICATION OF PIT LOAD, SEE PIT CHANNEL/BUFFER SKETCH.

FLOOR No.		FLOOR HEIGHT
REAR	FRONT	
TOTAL RISE		

TOP RAIL BRACKET ③	AT TOP OF HOISTWAY CONSULT YOUR CONCORD REPRESENTATIVE FOR EXACT LOCATION
INTERMEDIATE RAIL BRACKET ②	48" INTERVALS ABOVE BOTTOM BRACKET
BOTTOM RAIL BRACKET ①	24" ABOVE PIT FLOOR

PIT / OVERHEAD REQUIREMENTS			
MAX. SPEED (ft/min)	MIN. PIT	TOTAL TRAVEL	MINIMUM OVERHEAD
30	12" ***		104"(2642)

*** NOTE: Additional pit equipment required when over 36" deep , consult your local dealer for details

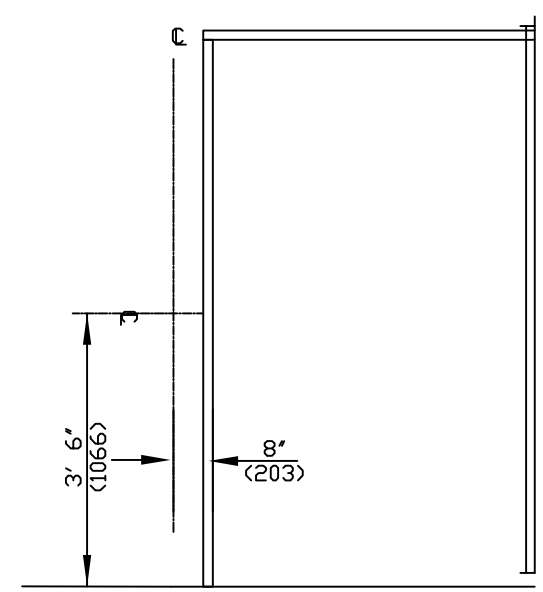

HALL FIXTURE LOCATION
LEFT HAND AS SHOWN
RIGHT HAND OPPOSITE
1. HALL BUTTON AT ALL FLOORS

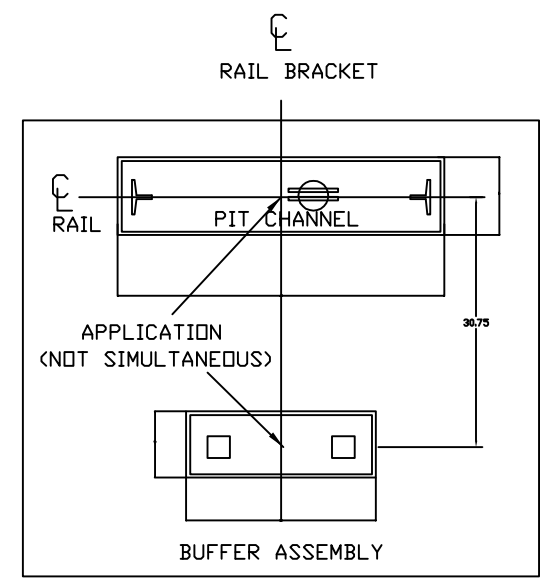

DOCUMENT REVISION #001, DATE: 01/10/18

RESIDENTIAL ELEVATOR
INFINITY HD MODEL 4860 2SPD

CUSTOMER:	DATE:	savaria
PROJECT:	REVISION DATE:	
LOCATION:	COMPLETED BY:	JOB No. / SHEET No.