SECTIONAL VIEW – ZENITH AUTO SLIM DOOR W Swing Door RESIDENTIAL-3654 (1R)

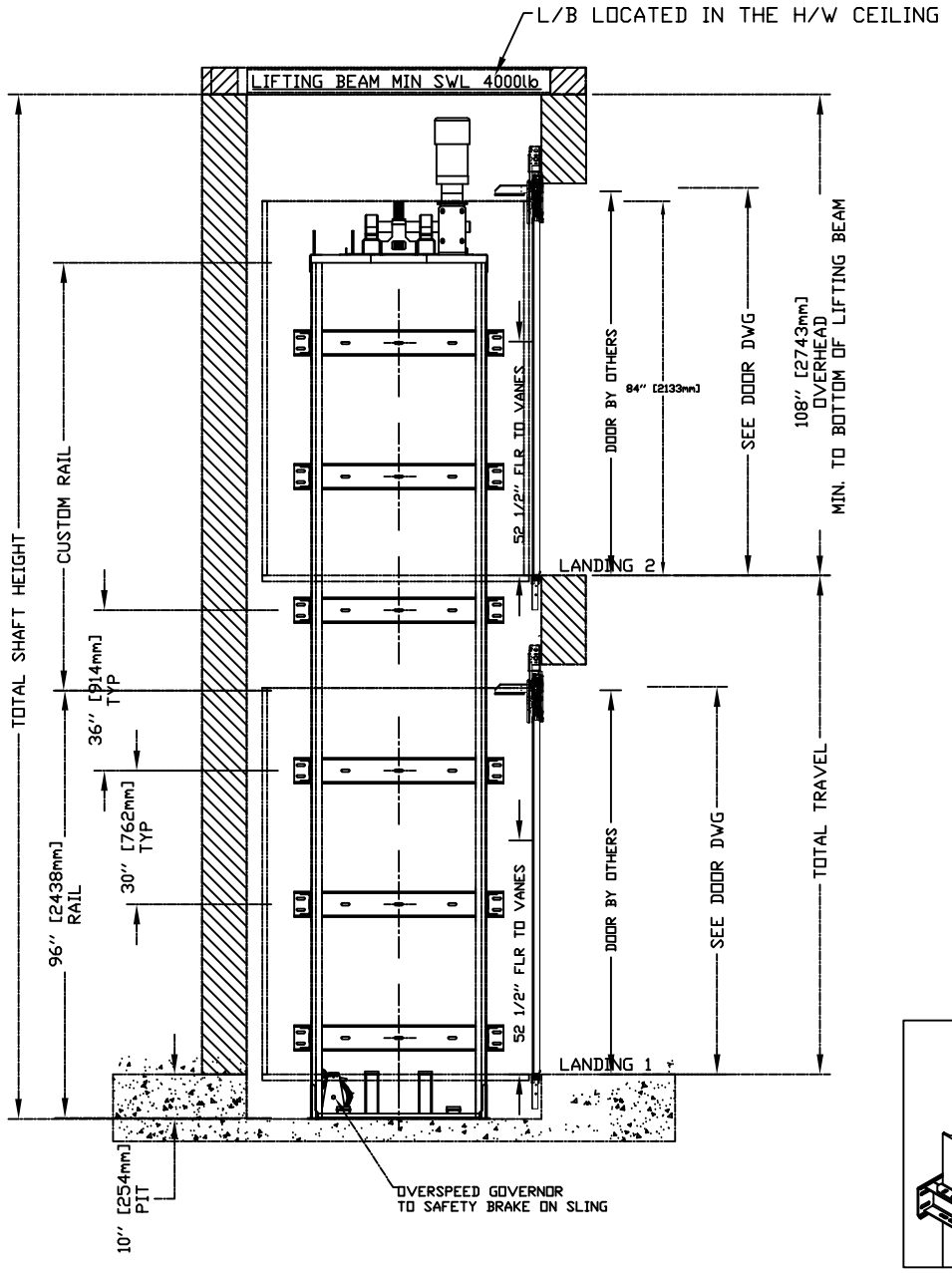

PLAN VIEW – ZENITH AUTO SLIM DOOR W Swing Door RESIDENTIAL-3654 (1R)

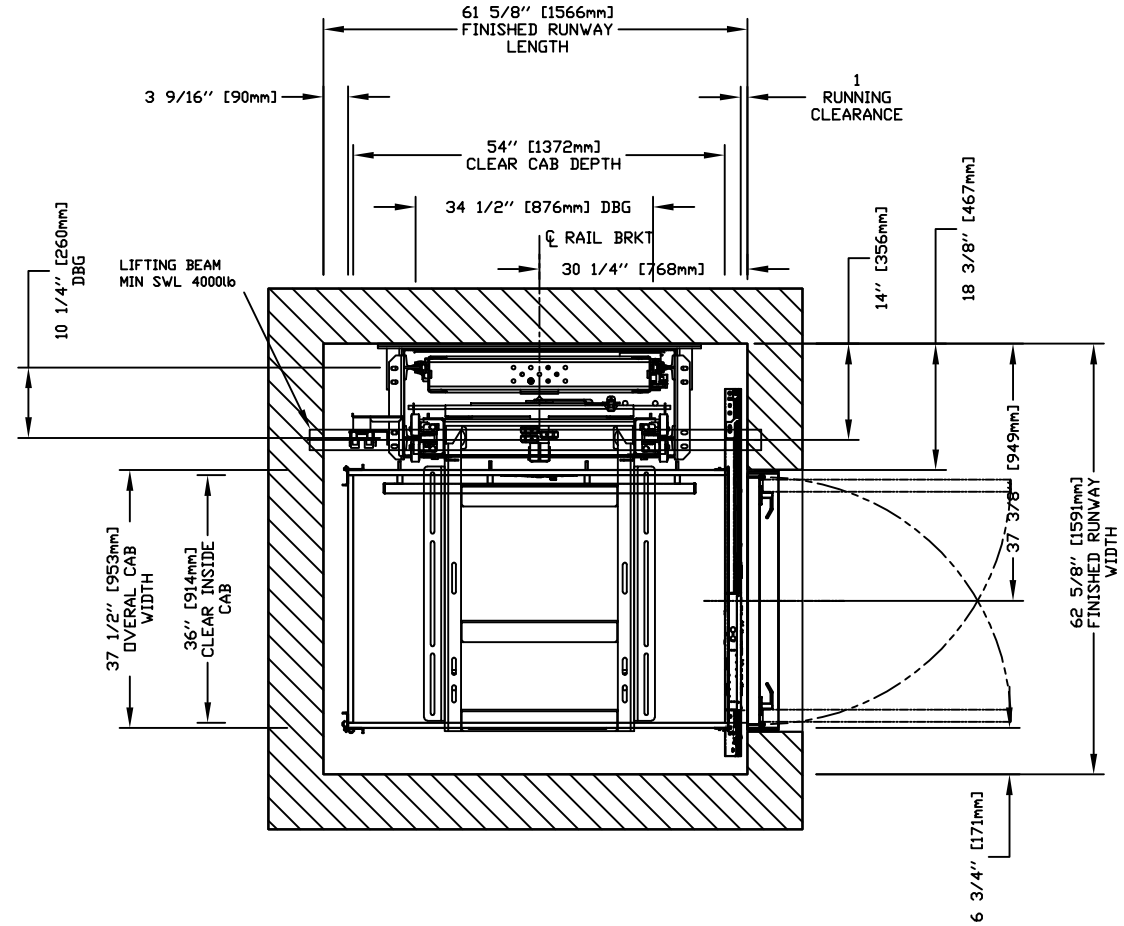

PROVISIONS BY OTHERS

*GENERAL

HOISTWAY- THE HOISTWAY MUST BE IN ACCORDANCE WITH 'SAFETY CODE FOR ELEVATORS AND ESCALATORS' (ASME A17.1) AND ALL STATE AND LOCAL CODES.

PLUMB HOISTWAY- DUE TO CLOSE RUNNING CLEARANCES OWNER/AGENT MUST ENSURE THAT HOISTWAY AND PIT (WHERE PROVIDED) ARE LEVEL, PLUMB AND SQUARE AND ARE IN ACCORDANCE WITH THE DIMENSIONS ON THESE DRAWINGS.

MINIMUM OVERHEAD CLEARANCE- OWNER/AGENT MUST ENSURE MINIMUM OVERHEAD CLEARANCE IS IN COMPLIANCE WITH CODES.

CONSTRUCTION SITE- OWNER/AGENT TO PROVIDE ALL MASONRY, CARPENTRY AND DRYWALL WORK AS REQUIRED AND SHALL PATCH AND MAKE GOOD (INCLUDING FINISH PAINTING) ALL AREAS WHERE WALLS/FLOORS MAY REQUIRE TO BE CUT, DRILLED OR ALTERED IN ANY WAY TO PERMIT THE PROPER INSTALLATION OF THE LIFT.

DIMENSIONS
CONTRACTOR/CUSTOMER TO VERIFY ALL DIMENSIONS AND REPORT ANY DISCREPANCIES TO OUR OFFICE IMMEDIATELY.

*STRUCTURAL

FLOOR/SUPPORT WALL LOADS- STRUCTURE TO ANCHOR A CRANK SHAFT AND SAFETY HARNESS, WHERE APPLICABLE/NEEDED, TO BE PROVIDED BY CONTRACTOR. CONTRACTOR TO ASSURE THAT BUILDING AND SHAFT WILL SAFELY SUPPORT ALL LOADS IMPOSED BY THE LIFT EQUIPMENT. REFER TO THE TABLES ON THIS DRAWING FOR LOADS IMPOSED BY THE EQUIPMENT.

*MACHINE ROOM (WHERE REQUIRED)

LOCATION / ACCESS- MACHINE ROOM LOCATED AT THE LOWEST LEVEL ADJACENT TO HOISTWAY, UNLESS SHOWN OTHERWISE ON THE LAYOUT DRAWINGS. FIELD ADJUSTMENT BY INSTALLER MAY BE NECESSARY TO MEET JOB SITE CONDITIONS OR REGULATIONS. MACHINE ROOM DOOR IS TO BE LOCKABLE AND IS TO MEET THE REQUIREMENTS OF THE AUTHORITY HAVING JURISDICTION.

SLEEVES FOR ELECTRIC LINES- FROM MACHINE ROOM TO HOISTWAY AS REQUIRED. (POSITION PER INSTALLERS INSTRUCTIONS).

TABLE 3

	DISCONNECT SIZE	TIME DELAY FUSE SIZE	VOLTS	PHASE	FLA
MOTOR & EQUIP.	30 AMPS	30 AMPS	208 volt	Three Phase	28.9 AMPS
MOTOR & EQUIP.	60 AMPS	40 AMPS	230 volt	Single Phase	35.0 AMPS
CAB LIGHTS	15 AMPS	15 AMPS	115 V	Single Phase	

*ELECTRICAL

POWER SUPPLY- (SEE SPECIFICATIONS) LOCKABLE FUSED DISCONNECT WITH AUXILIARY CONTACT TO BRAKE THE BATTERY FEED, OR CIRCUIT BREAKERS WITH A 3-POLE BREAKER FOR BATTERY FEED REQUIRED, IN COMPLIANCE WITH ELECTRICAL CODE, AS FOLLOWS: (LOCATED ON WALL ON LOCK JAMB SIDE OF MACHINE ROOM DOOR)

PERMANENT POWER- BEFORE INSTALLATION CAN BEGIN, PERMANENT POWER MUST BE SUPPLIED.

LIGHTING- THE ILLUMINATION SHALL BE NOT LESS THAN 200 LX (19 FC) AT THE FLOOR LEVEL IN ALL MACHINE ROOMS AND MACHINERY SPACES. ENSURE AT LEAST 100 LX (10 FC) AMBIENT LIGHTING OVER LIFT AREA.

PHONE- NEED A DEDICATED PHONE LAND LINE

*ENTRANCES

FASCIA PANEL BELOW UPPER LEVEL ENTRANCE- WHERE REQUIRED, FASCIA PANEL MUST BE FASTENED TO A SOLID WALL AND BE PERPENDICULAR TO THE FLOOR AND WALLS. HOISTWAY FASCIA IS NOT SELF-SUPPORTING FOR LONG, CONTINUOUS RUNS VOID OF ENTRANCES. ADEQUATE SUPPORT FOR THE FASCIA MUST BE PROVIDED .

NOTE LIFTING BEAM:
A 4000LB MIN SWL BEAM MUST BE PROVIDED IN THE OVERHEAD. BEAM TO BE POSITIONED AS SHOWN IN ELEVATION & PLAN VIEWS. FOR OVERHEAD OF 108": POSITION THE UNDERSIDE OF BEAM AT 104" & BEAM MUST BE TEMPORARY.

NOTE C
ALL INFORMATION IS SUBJECT TO CHANGE.
PLEASE REFERENCE OUR ON-LINE DRAWINGS AT
www.savaria.com FOR THE MOST RECENT UPDATES

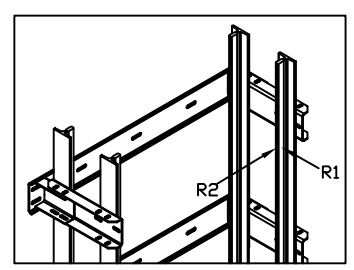

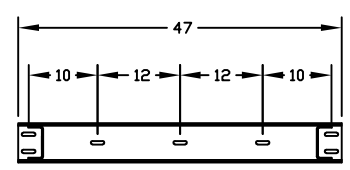

RAIL BRACKETS

TABLE 1

RAIL FORCES	
*R1	*R2
500 lbf	1570 lbf
RAIL WEIGHT	8.0 lbs / ft

FOR TOTAL PULL-OUT FORCE ON RAIL BRACKET,
eg.2 x 720 = 1440 lbf
FOR LOCAL APPLICATION OF PIT LOAD,
R1 MUST BE DOUBLED.

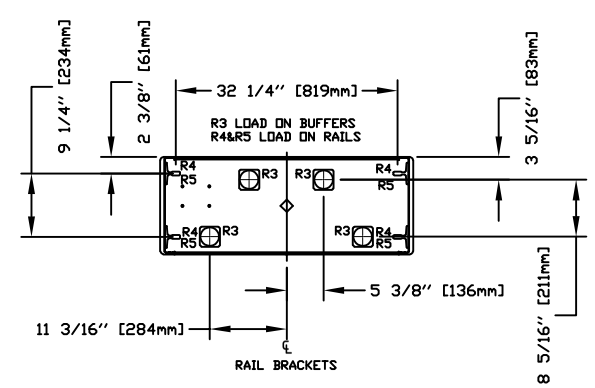

TABLE 2

PIT RE-ACTION FORCE	
R3	8000 LBS
R4	3000 LBS
R5	9500 LBS

LOADS ON PIT

HALL BUTTON NEEDED AT ALL FLOORS

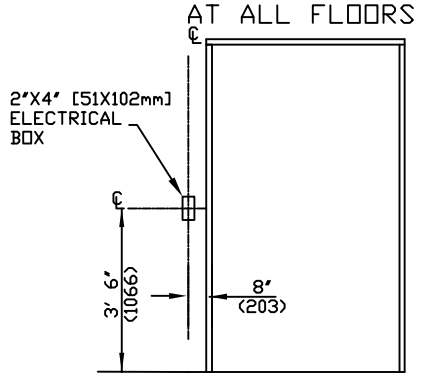

LEFT HAND SHOWN
RIGHT HAND OPPOSITE

ENTRANCE

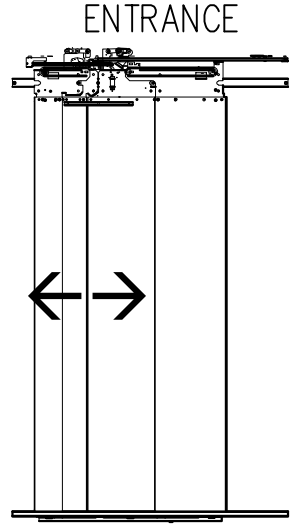

DOOR SWING

LEFT HAND SWING

RIGHT HAND SWING

RESIDENTIAL ELEVATOR
ZENITH MODEL 36X54 TYPE 1R

CUSTOMER:	DATE:	THE INFORMATION DISCLOSED HEREIN IS THE EXCLUSIVE PROPERTY OF savaria™ AND MAY NOT BE USED BY OTHERS WITHOUT PRIOR WRITTEN CONSENT
PROJECT:	REVISION DATE:	
LOCATION:	COMPLETED BY:	SHEET# 1/1