V1504

ELEVATION VIEW TYPE-2

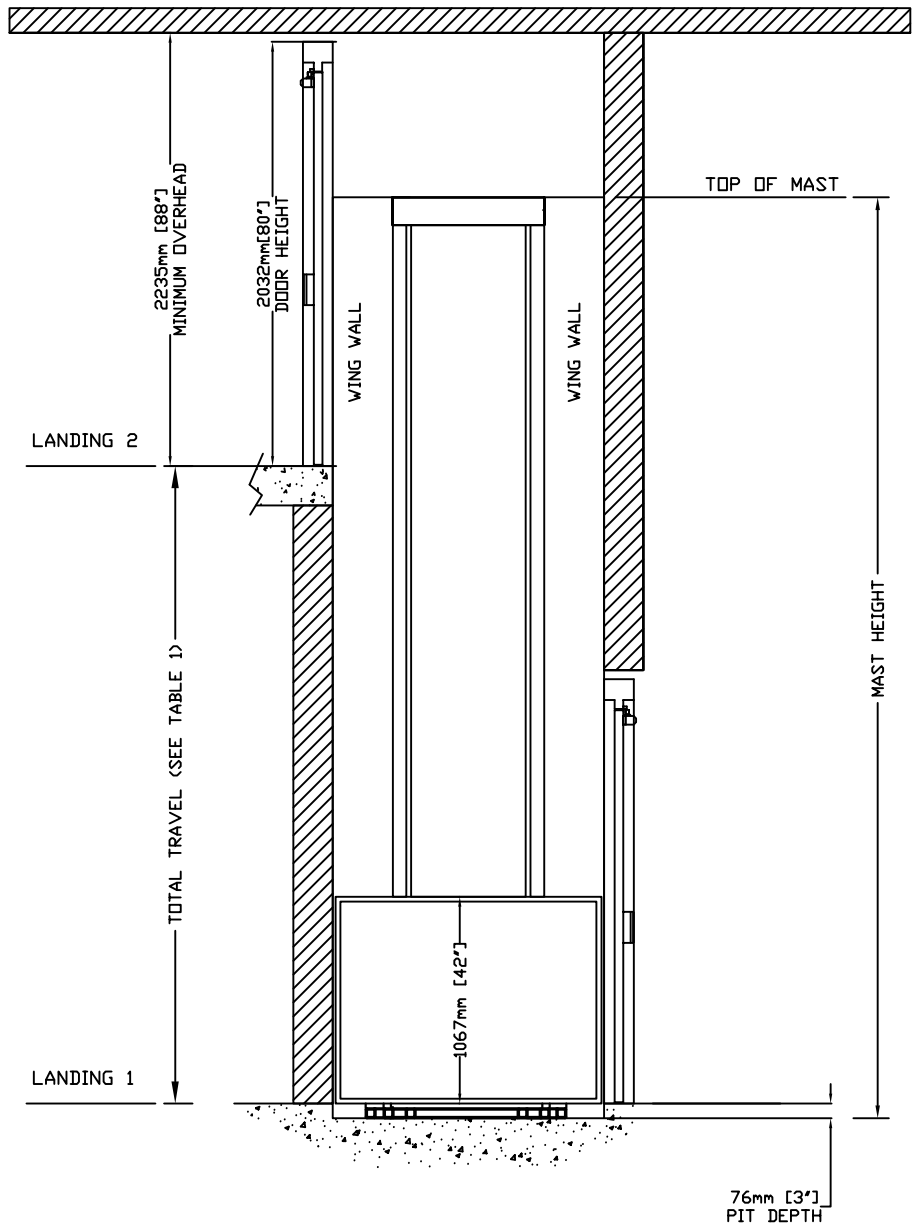

TOP VIEW TYPE-2

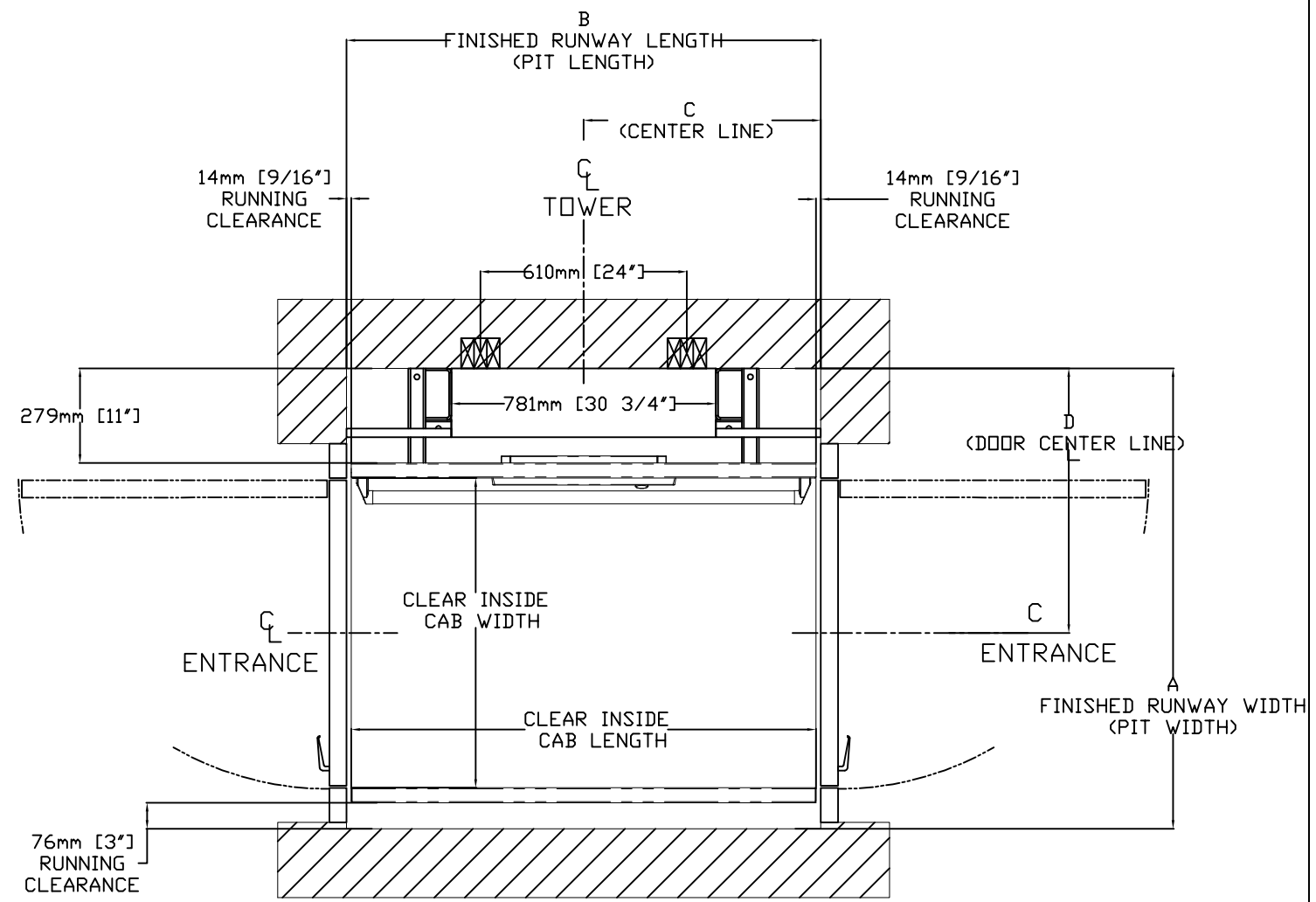

ANCHOR POINTS

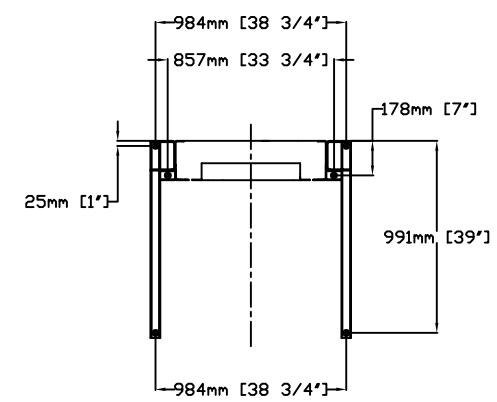

FORCES

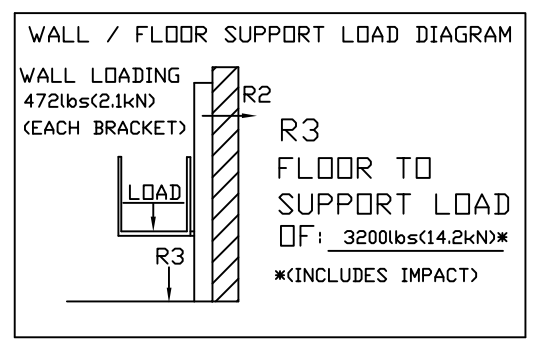

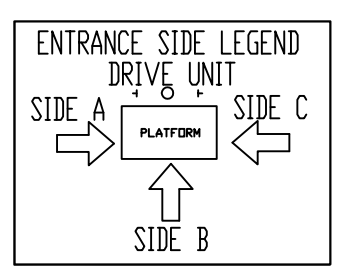

TABLE 1- MAST HEIGHT*

Max.Travel mm (Inches)	Extension Height mm (Inches)					Mast Height with 4.188" CAP	
	2388 (94")	1778 (70")	1168 (46")	559 (22")	254 (10")	mm	Inches
1219 (48")	1				1	2748	108.188
1524 (60")	1			1		3053	120.188
1829 (72")	1			1	1	3307	130.188
2438 (96")	1		1		1	3916	154.188
2743 (108")	1	1				4272	168.188
3048 (120")	1	1			1	4526	178.188
3658 (144")	2				1	5136	202.188
4267 (168")	2		1			6050	238.188
4877 (192")	2	1				6660	262.188
5486 (216")	3					7269	286.188
6096 (240")	3			1		7828	308.188
6706 (264")	3		1			8438	332.188
7010 (276")	3		1		1	8692	342.188

*EXAMPLE TABLE WITH 3' PIT, DIMENSIONS VARY WITH TRAVEL

TABLE 2- HOISTWAY DIMENSION

CLEAR INSIDE CAB WIDTH		CLEAR INSIDE CAB LENGTH		A FINISHED RUNWAY WIDTH		B FINISHED RUNWAY LENGTH		C TOWER CENTER LINE		D DOOR CENTER LINE (IN CASE OF 36" DOOR)	
mm	Inches	mm	Inches	mm	Inches	mm	Inches	mm	Inches	mm	Inches
914	36	1219	48	1359	53 1/2	1248	49 1/8	624	24 9/16	781	30 3/4
914	36	1372	54	1359	53 1/2	1400	55 1/8	700	27 9/16	781	30 3/4
914	36	1524	60	1359	53 1/2	1553	61 1/8	776	30 9/16	781	30 3/4
1067	42	1219	48	1511	59 1/2	1248	49 1/8	624	24 9/16	857	33 3/4
1067	42	1372	54	1511	59 1/2	1400	55 1/8	700	27 9/16	857	33 3/4
1067	42	1524	60	1511	59 1/2	1553	61 1/8	776	30 9/16	857	33 3/4

DOOR SWING

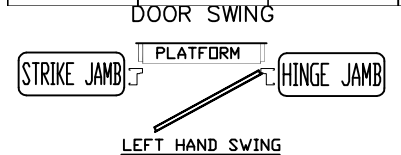

LEFT HAND SWING

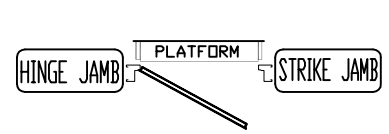

RIGHT HAND SWING

THE INFORMATION DISCLOSED HEREIN IS THE EXCLUSIVE PROPERTY OF
savaria™
AND MAY NOT BE USED BY OTHERS WITHOUT PRIOR WRITTEN CONSENT

TITLE: V1504 TYPE - 2

CUSTOMER

PROJECT:

LOCATION:

DATE: 08/24/2009

SCALE: 1:1

DRAFTER: VINOD C

REVISION: 001 06/25/2010

SHEET 1 OF 1

DRAWING NO: V1504 PLUS HOISTWAY